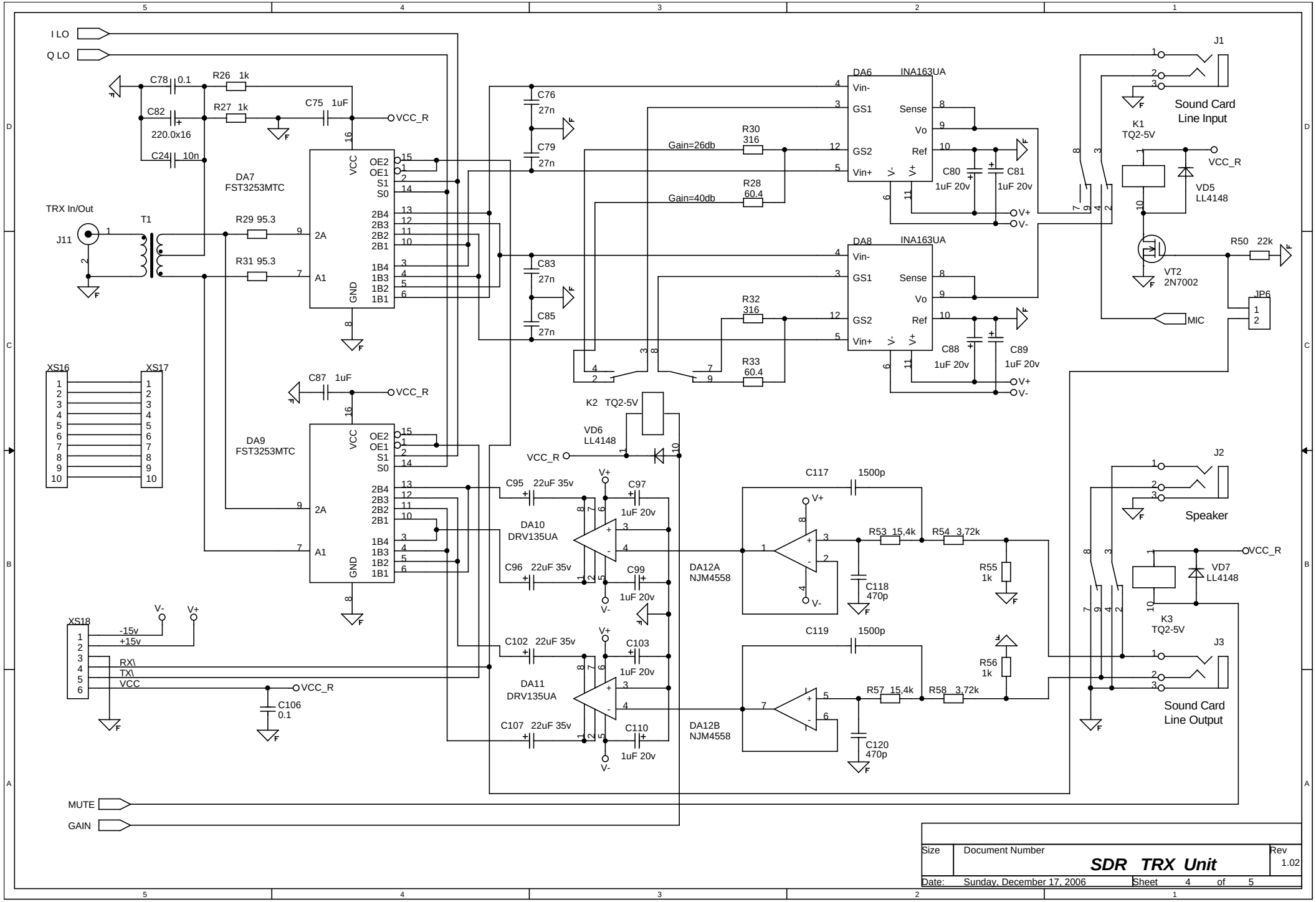
I LO
Q LO
C78 0.1
R26 1k
R27 1k
C82 220.0x16
C75 1uF
VCC_R
C24 10n
DA7 FST3253MTC
TRX In/Out
J11
T1
R29 95.3
R31 95.3
C76 27n
C79 27n
C83 27n
C85 27n
DA6 INA163UA
DA8 INA163UA
Vin-
GS1
GS2
Vin+
Sense
Vo
Ref
V-
V+
Gain=26db
Gain=40db
R30 316
R28 60.4
R32 316
R33 60.4
C80 1uF 20v
C81 1uF 20v
C88 1uF 20v
C89 1uF 20v
J1
Sound Card Line Input
K1 TQ2-5V
VD5 LL4148
VT2 2N7002
R50 22k
JP6
MIC
XS16
XS17
C87 1uF
DA9 FST3253MTC
K2 TQ2-5V
VD6 LL4148
C95 22uF 35v
C97 1uF 20v
DA10 DRV135UA
C96 22uF 35v
C99 1uF 20v
C102 22uF 35v
C103 1uF 20v
DA11 DRV135UA
C107 22uF 35v
C110 1uF 20v
DA12A NJM4558
DA12B NJM4558
C117 1500p
C118 470p
C119 1500p
C120 470p
R53 15,4k
R54 3,72k
R55 1k
R56 1k
R57 15,4k
R58 3,72k
J2
Speaker
VD7 LL4148
K3 TQ2-5V
J3
Sound Card Line Output
XS18
-15v
+15v
RX\
TX\
VCC
C106 0.1
MUTE
GAIN
Size
Document Number
SDR TRX Unit
Rev
1.02
Date: Sunday, December 17, 2006
Sheet 4 of 5